# P31P & P32P Proportional Regulators

- Very fast response times
- Accurate output pressure
- Parameter settings
- Selectable I/O parameters
- Quick, full flow exhaust
- LED display indicates output pressure
- No air consumption in steady state
- Multiple mounting options
- Protection to IP65

P31P Series
Bottom exhaust

P32P Series
Bottom exhaust

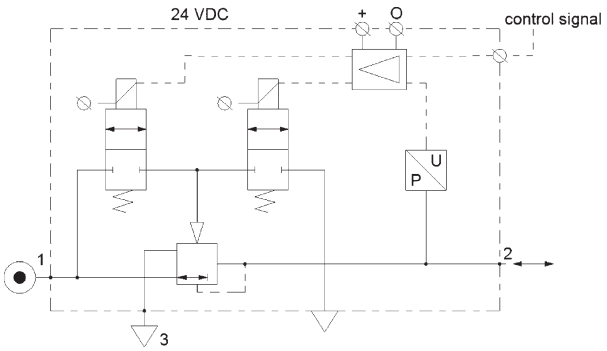


| Port Size | Description | Part Number |
|---|---|---|
| 1/4" | 145 psig (0-10 bar), NC 0-10V | **P31PA12AD2VD1A** |
| 1/2" | 145 psig (0-10 bar), NC 0-10V | **P32PA14AD2VD1A** |

## Operating Information

| | | |
|---|---|---|
| Flow capacity*: | P31P | 40 scfm (19 $dm^3$/s, ANR) |
| | P32P | 120 scfm (57 $dm^3$/s, ANR) |
| Temperature range: | | 32°F to 122°F (0°C to 50°C) |
| Supply pressure (max): | | |
| 2 bar unit | | 36.3 psig (2.5 bar) |
| 10 bar unit | | 152 psig (10.5 bar) |
| Operating pressure (min): | | P2 pressure + 7.3 psig (0.5 bar) |
| Working medium: | | Compressed air or inert gasses, filtered to 40µ |
| Pressure range: | | 0 to 30 psig (0 to 2 bar)<br>0 to 145 psig (0 to 10 bar) |
| Weight: | P31P | 0.64 lb (0.291 kg) |
| | P32P | 1.42 lb (0.645 kg) |

* Inlet pressure 91.3 psig (6.3 bar), inlet pressure and 4.9 psig (0.34 bar) pressure drop.

## Ordering Information:

**P31PA 1 2 A S 2 V D 1 A**

| Body Size | |
|---|---|
| Global Modular Mini (1/4") | P31PA |
| Global Modular Compact (1/2") | P32PA |

| Thread Type | |
|---|---|
| BSPP | 1 |
| NPT | 9 |

| Port Size | |
|---|---|
| Global Modular Mini (1/4") | 2 |
| Global Modular Compact (1/2") | 4 |

| Version | |
|---|---|
| Bottom Ported Exhaust (NC) | A |
| Bottom Ported Forced Exhaust (NO)† | E |

| Pressure Range | |
|---|---|
| Z | 0 - 2 bar (0-29 PSIG) |
| S | 0 - 7 Bar (0-101 PSIG) |
| D | 0 - 10 bar (0-145 PSIG) |

| Power Supply | |
|---|---|
| 2 | 24 volts |

| Control Signal | |
|---|---|
| V | 0-10V‡ |
| A | 4 - 20mA |

‡ Factory setting is 0-10 V control signal. 4-20 mA control signal available via parameter 4 on keypad.

| Output Signal | |
|---|---|
| D | Digital, PNP |
| P | PNP or 0-10V |
| N | NPN or 0-10V |
| M | 4-20mA Fixed |

D) Digital PNP output only, no analog output selectable
P) Digital PNP and analogue 0-10V outputs selectable, by means of parameter 6. (Factory default 0-10V)
N) Digital NPN and analog 0-10 V outputs selectable by means of parameter 6. Factory default 0-10V)
M) Analog 4-20mA output only.
Note: On all analog outputs the F.S. value can be adjusted by means of parameter 8.

| Input Connector | |
|---|---|
| 1 | M12 (4-pin) |

**Most Popular**

## Technical Information

### Accuracy

+/- 1.0% of F.S.*

* Full scale (F.S.) - For 2 bar (29 psig) versions this will be 2 bar (29 psig), for the 10 bar (145 psig) version full scale will be 10 bar (145 psig).

### Air consumption

No consumption in stable regulated situation.

### Display

The regulator is provided with a digital display, indicating the output pressure, either in bar or psig.
The factory setting is as indicated on the label, can be changed through to software at all times (parameter 14)

### Supply voltage

24 VDC +/- 10%

### Power consumption

Max. 1.1W with unloaded signal outputs

### Control signals

The electronic pressure regulator can be externally controlled through an analogue control signal of either 0-10V or 4-20mA. (parameter 4).

### Output signals

As soon as the output pressure is within the signal band a signal is given of 24VDC, PNP Ri = 1 kOhm
Outside the signal band this connection is 0V.

### Connections

(In case of output signal (Option D)
Central M12 connector 4-pole
The electrical connections are as follows:

| Pin No. | | Function | Color |
|---|---|---|---|
| 1 | 24 V | Supply | Brown |
| 2 | 0 to 10 V | Control Signal Ri = 100k Ω | White |
| | 4 to 20mA | Control Signal Ri = 500 Ω | |
| 3 | 0 V (GND) | Supply & Set Point Ground | Blue |
| 4 | 24 V | Alarm Output Signal | Black |

## Flow Charts

### P31P Regulator 1/4" Ports

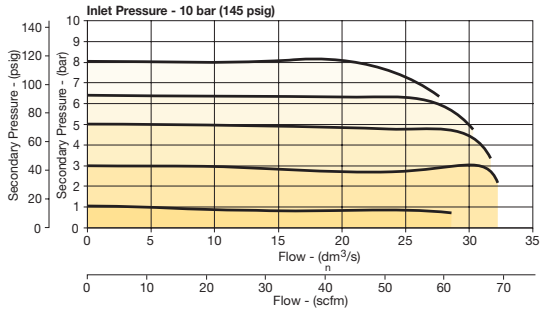


### P32P Regulator 1/2" Ports

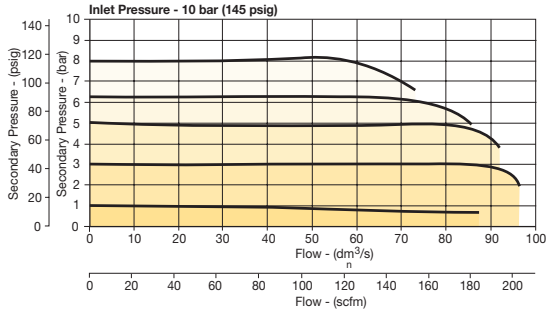


**Degree of protection:** IP65

### EU conformity

CE: standard
EMC: according to directive 89/336/EEC
This pressure regulator is in accordance with:

**EN 61000-6-1:2001** **EN 61000-6-2:2001**
**EN 61000-6-3:2001** **EN 61000-6-4:2001**

### Mounting position

Preferably vertical, with the cable gland on top.

### Materials: P31P & P32P

| | |
|---|---|
| Magnet core | Steel |
| Solenoid valve poppet | FPM |
| Solenoid valve housing | Techno polymer |
| Regulator body (P31P & P32P versions) | Aluminum |
| Regulator top housing | Nylon |
| Valve head | Brass & NBR |
| Remaining seals | NBR |

## P31P

Dimensions inches (mm)

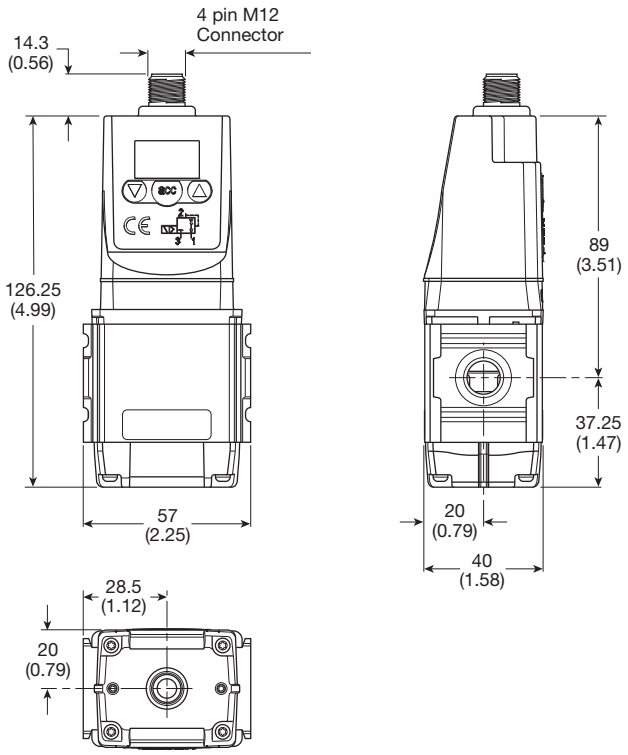


## L-Bracket

**P3HKA00ML**

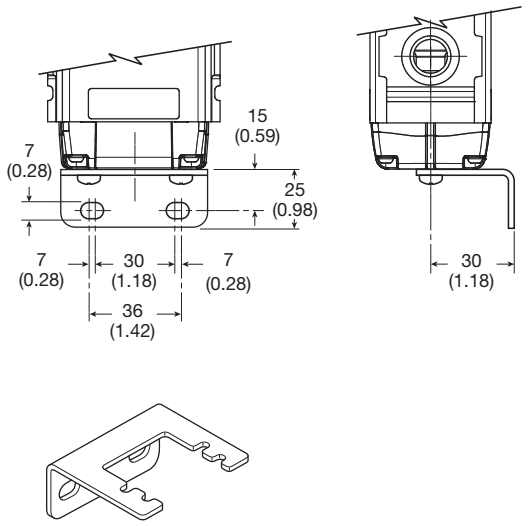


## Foot Bracket

**P3HKA00MC**

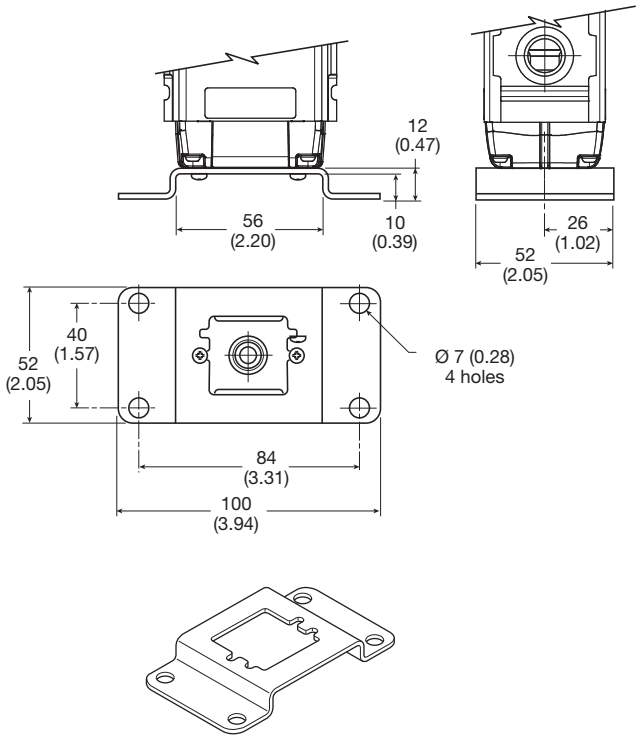


## Cables

| Description | Part Number |
|---|---|
| 2 mtr. cable with moulded straight M12x1 connector | **CB-M12-4P-2M** |

**Most Popular**

## P32P

Dimensions inches (mm)

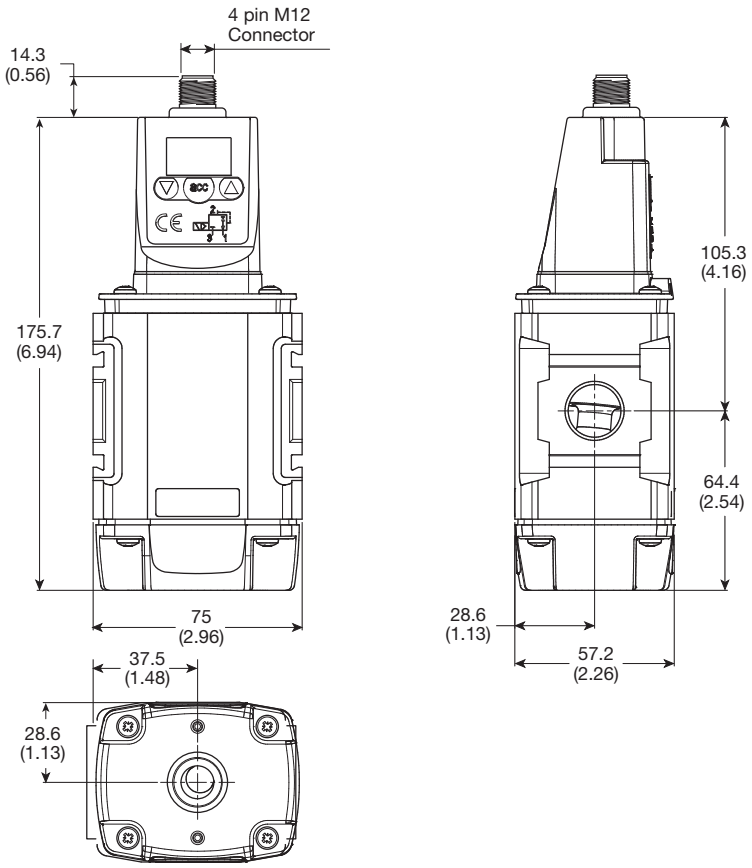


## L-Bracket

**P3KKA00ML**

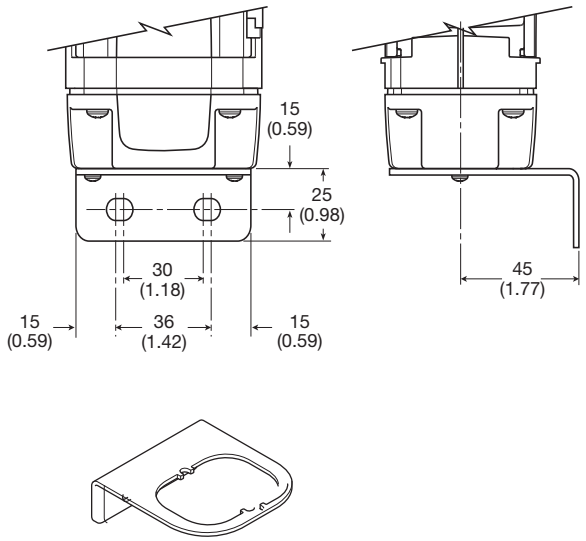


## Foot Bracket

**P3KKA00MC**

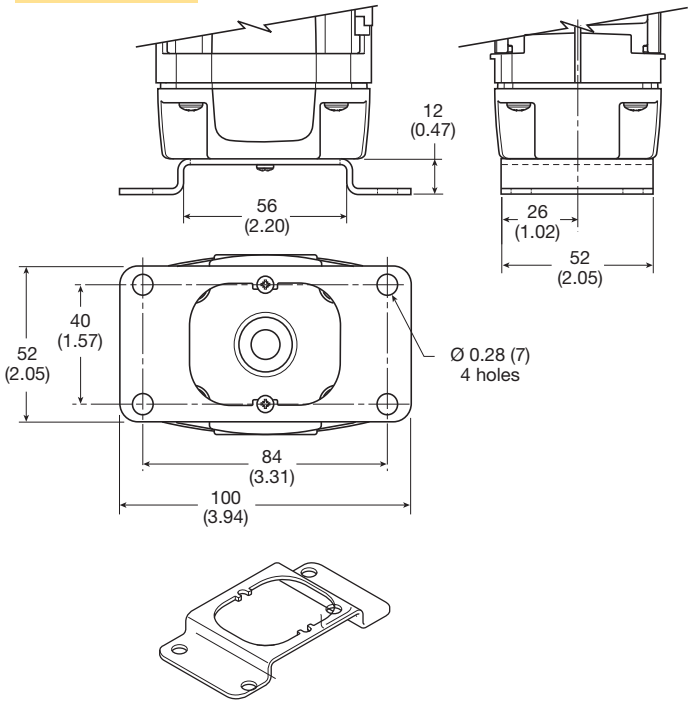


## Cables

| Description | Part Number |
|---|---|
| 2 mtr. cable with moulded straight M12x1 connector | **CB-M12-4P-2M** |

**Most Popular**